PART: EDT6-L4WXV

6" Wide Aluminum Truss. 1" Chords with 5/16" Webs

©2015 EXHIBIT AND DISPLAY TRUSS.COM

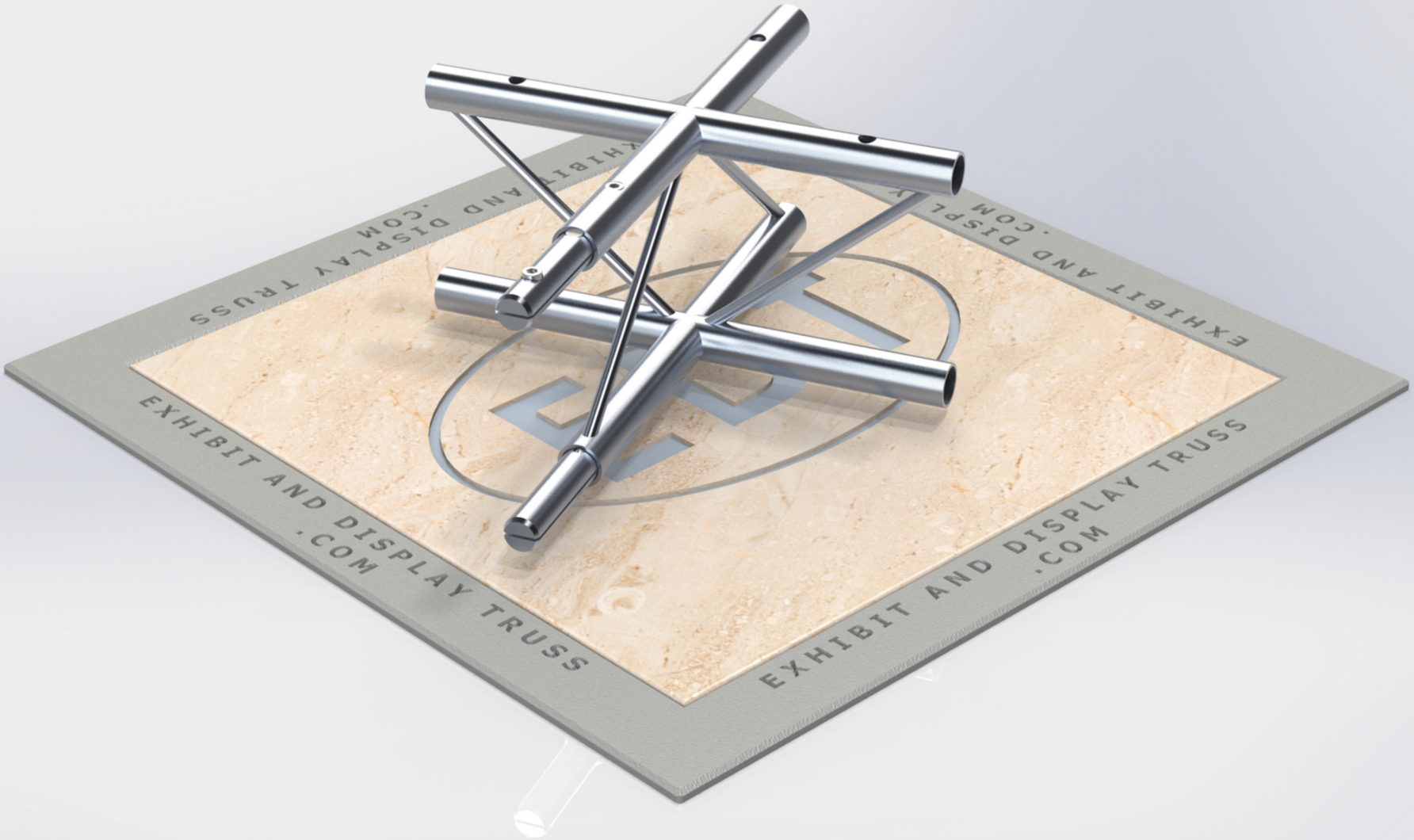

Toll Free: 855-323-4866
Email: info@exhibitanddisplaytruss.com

ExhibitAndDisplayTruss.com

PART: EDT6-L4WXV

6" Wide Aluminum Truss. 1" Chords with 5/16" Webs

©2015 EXHIBIT AND DISPLAY TRUSS.COM

Truss Profile
6" Wide Ladder Truss
1"Ø Chords, 5/16"Ø Webs

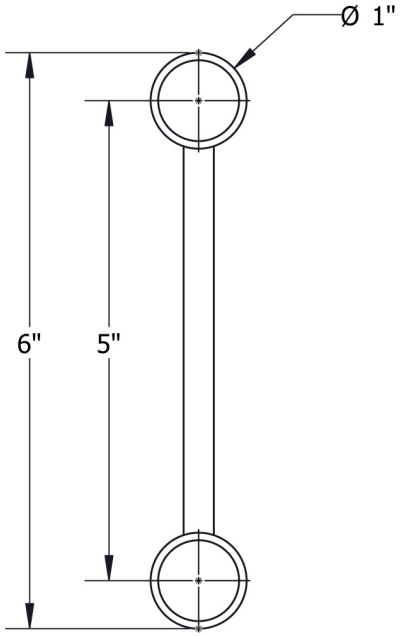

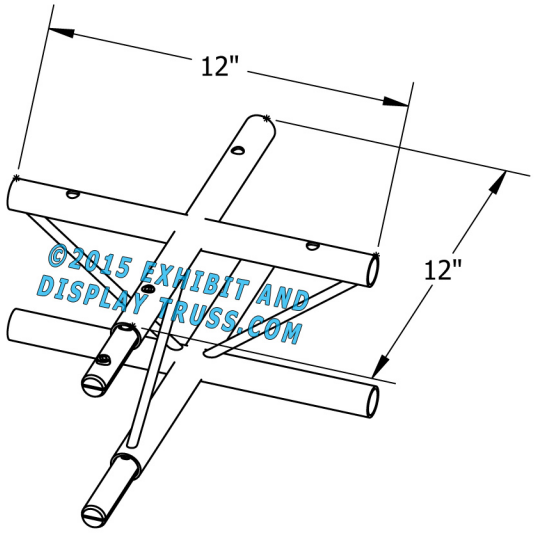

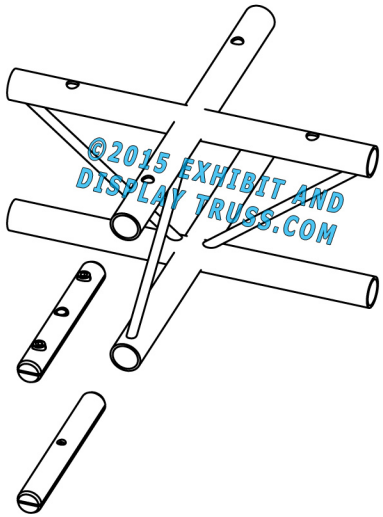

Toll Free: 855-323-4866
Email: info@exhibitanddisplaytruss.com

ExhibitAndDisplayTruss.com